UNIVERSITY OF CAMBRIDGE INTERNATIONAL EXAMINATIONS
General Certificate of Education Advanced Level

CANDIDATE NAME

CENTRE NUMBER

CANDIDATE NUMBER

1935239115

PHYSICS **9702/53**

Paper 5 Planning, Analysis and Evaluation **May/June 2012**

1 hour 15 minutes

Candidates answer on the Question Paper.

No Additional Materials are required.

READ THESE INSTRUCTIONS FIRST

Write your Centre number, candidate number and name on all the work you hand in.
Write in dark blue or black pen.
You may use a soft pencil for any diagrams, graphs or rough working.
Do not use staples, paper clips, highlighters, glue or correction fluid.
DO **NOT** WRITE IN ANY BARCODES.

Answer **all** questions.
You may lose marks if you do not show your working or if you do not use appropriate units.

At the end of the examination, fasten all your work securely together.
The number of marks is given in brackets [ ] at the end of each question or part question.

For Examiner's Use	
1	
2	
Total	

This document consists of **8** printed pages.

DC (KN/SW) 56772
© UCLES 2012

1 A fairground ride carries passengers in chairs which are attached by metal rods to a rotating central pole, as shown in Fig 1.1. When the pole rotates with angular velocity ω, the rods make an angle θ to the vertical.

For Examiner's Use

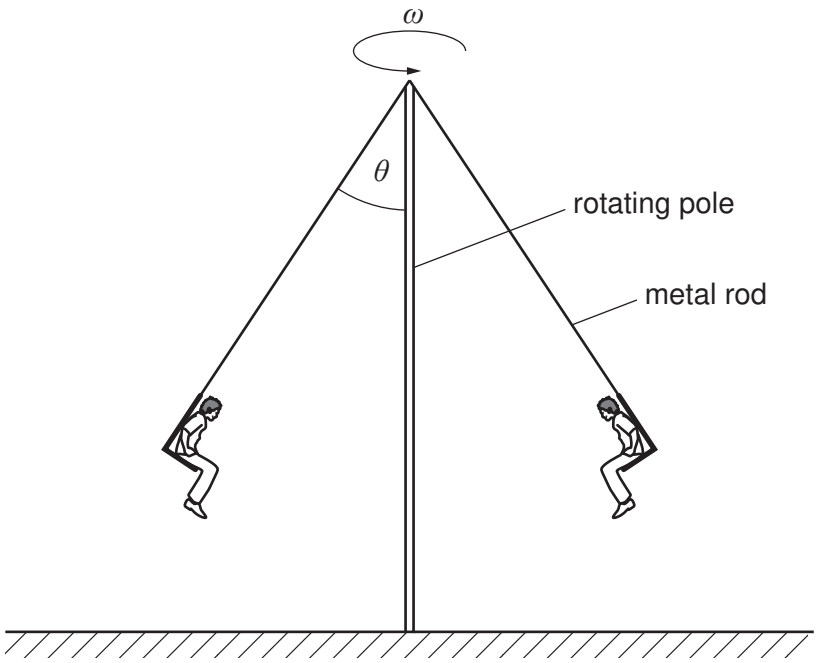

Fig 1.1

It is suggested that $\cos\theta$ is inversely proportional to ω^2.

Design a laboratory experiment, using a small object to represent an occupied chair, to test the relationship between θ and ω. You should draw a diagram, on page 3, showing the arrangement of your equipment. In your account you should pay particular attention to

(a) the procedure to be followed,

(b) the measurements to be taken,

(c) the control of variables,

(d) the analysis of the data,

(e) the safety precautions to be taken.

[15]

© UCLES 2012

Diagram

For Examiner's Use

.....

.....

.....

.....

.....

.....

.....

.....

.....

.....

.....

.....

.....

.....

.....

For Examiner's Use

For Examiner's Use	Defining the problem	Methods of data collection	Method of analysis	Safety considerations	Additional detail

2 A current-carrying wire is clamped at each end, as shown in Fig 2.1. A student investigates how the deflection y at the centre of the wire varies with the current I.

For Examiner's Use

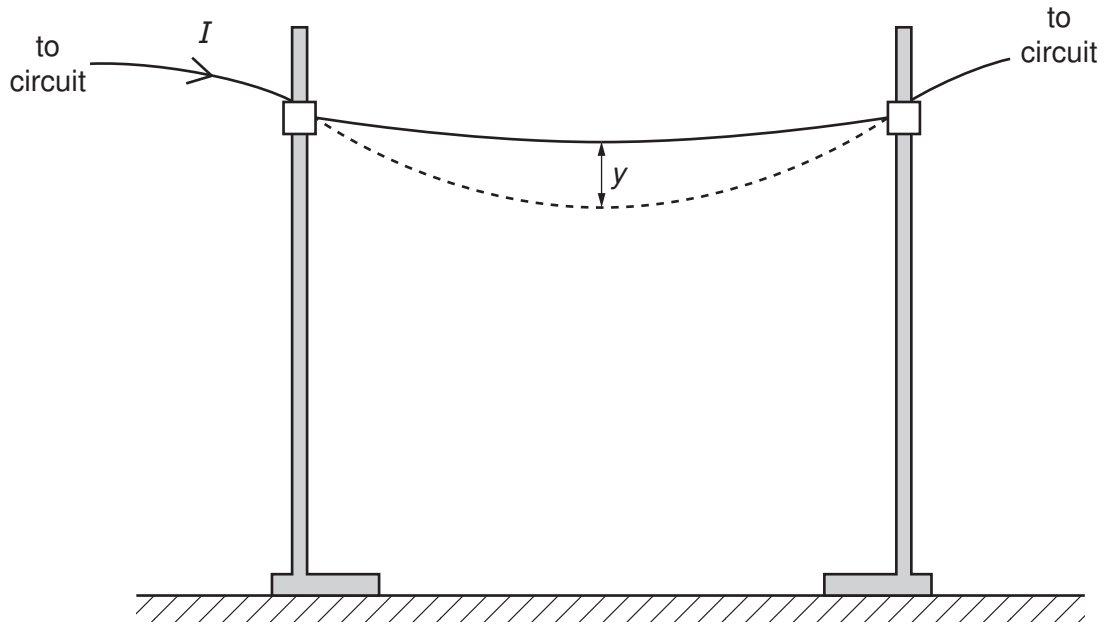

Fig. 2.1

For different currents, the deflection is recorded.

Question 2 continues on the next page.

It is suggested that y and I are related by the equation

$$y = sI^r$$

where r and s are constants.

For Examiner's Use

(a) A graph is plotted of lg y on the y-axis against lg I on the x-axis. Determine expressions for the gradient and y-intercept in terms of r and s.

gradient = ...

y-intercept = ...
[1]

(b) Values of I and y are given in Fig. 2.2.

$I/10^{-2}$ A	y/mm	lg ($I/10^{-2}$ A)	lg (y/mm)
50	2.6 ± 0.2		
60	3.4 ± 0.2		
70	4.4 ± 0.2		
80	5.4 ± 0.2		
90	6.6 ± 0.2		
95	7.2 ± 0.2		

Fig. 2.2

Calculate and record values of lg ($I/10^{-2}$ A) and lg (y/mm) in Fig. 2.2. Include the absolute uncertainties in lg (y/mm). [3]

(c) **(i)** Plot a graph of lg (y/mm) against lg ($I/10^{-2}$ A). Include error bars for lg (y/mm).[2]

(ii) Draw the straight line of best fit and a worst acceptable straight line on your graph. Both lines should be clearly labelled. [2]

(iii) Determine the gradient of the line of best fit. Include the uncertainty in your answer.

gradient = ... [2]

© UCLES 2012

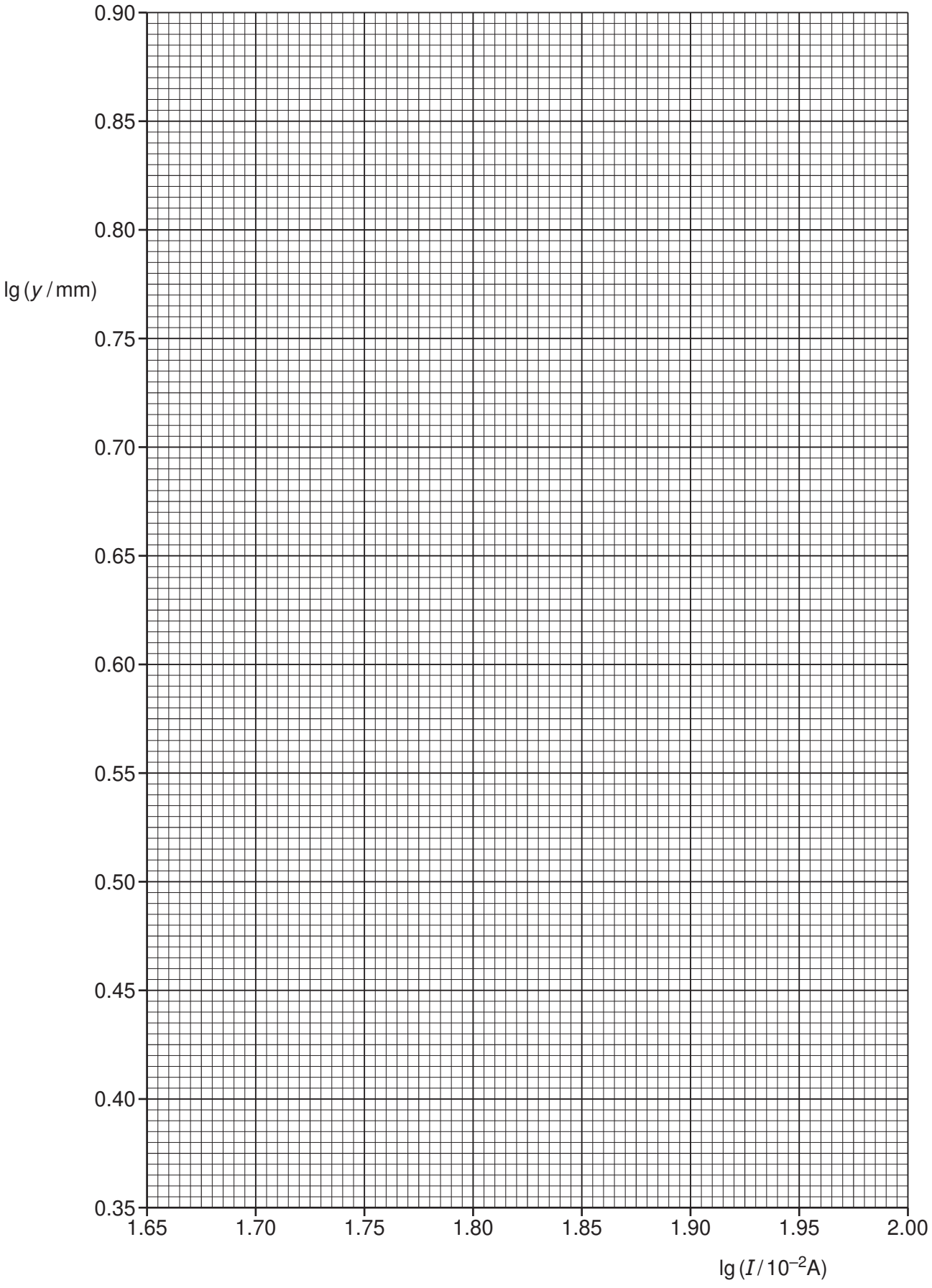

For Examiner's Use

(iv) Determine the *y*-intercept of the line of best fit. Include the uncertainty in your answer.

For Examiner's Use

y-intercept = ... [2]

(d) Using your answers to **(c)(iii)** and **(c)(iv)**, determine values for *r* and *s*. Include the uncertainties in your answers. You need not be concerned with the units of *r* and *s*.

r = ...

s = ...

[3]

Permission to reproduce items where third-party owned material protected by copyright is included has been sought and cleared where possible. Every reasonable effort has been made by the publisher (UCLES) to trace copyright holders, but if any items requiring clearance have unwittingly been included, the publisher will be pleased to make amends at the earliest possible opportunity.

University of Cambridge International Examinations is part of the Cambridge Assessment Group. Cambridge Assessment is the brand name of University of Cambridge Local Examinations Syndicate (UCLES), which is itself a department of the University of Cambridge.